MALE END VIEW

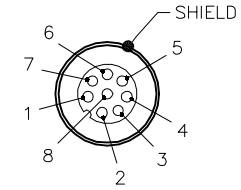

1 = V− (WHT)
2 = V+ (BRN)
3 = A (GRN)
4 = $\overline{A}$ (YEL)
5 = B (GRY)
6 = $\overline{B}$ (PNK)
7 = Z (BLU)
8 = $\overline{Z}$ (RED)

OUTPUT SIGNAL FORMAT

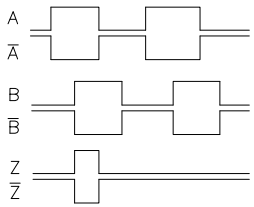

SPECIFICATIONS

OUTPUT CIRCUIT	PUSH–PULL (IC–DL)
SUPPLY VOLTAGE	10–30VDC
POWER CONSUMPTION (NO LOAD)	<100mA (50mA typical)
PERMISSIBLE LOAD/CHANNEL	±20 mA MAX
PULSE RATE	1024 ppr
PULSE FREQUENCY	300 kHz MAX.
SHORT–CIRCUIT PROTECTION	YES
REVERSE POLARITY PROTECTION AT V+	YES
MAX. SPEED	12000 RPM
MAX SPEED CONTINOUS	6000 RPM
MOMENT OF INTERIA	$6x10^{-6}$ kgm^2
STARTING TORQUE AT 20C	<0.01 Nm
TEMPERATURE RANGE	−40°C to +85°C (−40°F to +185°F)
HOUSING MATERIAL	DIE CAST ZINC
FLANGE MATERIAL	ALUMINUM
SHAFT MATERIAL	STAINLESS STEEL
SHOCK RESISTANCE	250g (2500m/s²), 6ms
VIBRATION RESISTANCE	10g (100m/s²), 10–2000 Hz
PROTECTION CLASS	MEETS IEC IP65
UL CERTIFIED	YES, FILE E224618
CE DECLARATION OF CONFORMANCE	YES, 2004/108/EG
CONTACT CARRIER MATERIAL/COLOR	NYLON or TPU
MOLDED HEAD MATERIAL/COLOR	TPU/YELLOW
CONTACT MATERIAL/PLATING	BRASS/GOLD
COUPLING NUT MATERIAL/PLATING	BRASS/NICKEL
OUTER JACKET MATERIAL/COLOR	PUR/GREY
CONDUCTOR INSULATION MATERIAL	PVC
NUMBER OF CONDUCTORS [AWG]	12x26 AWG
DRAIN/SHIELD	SHIELD

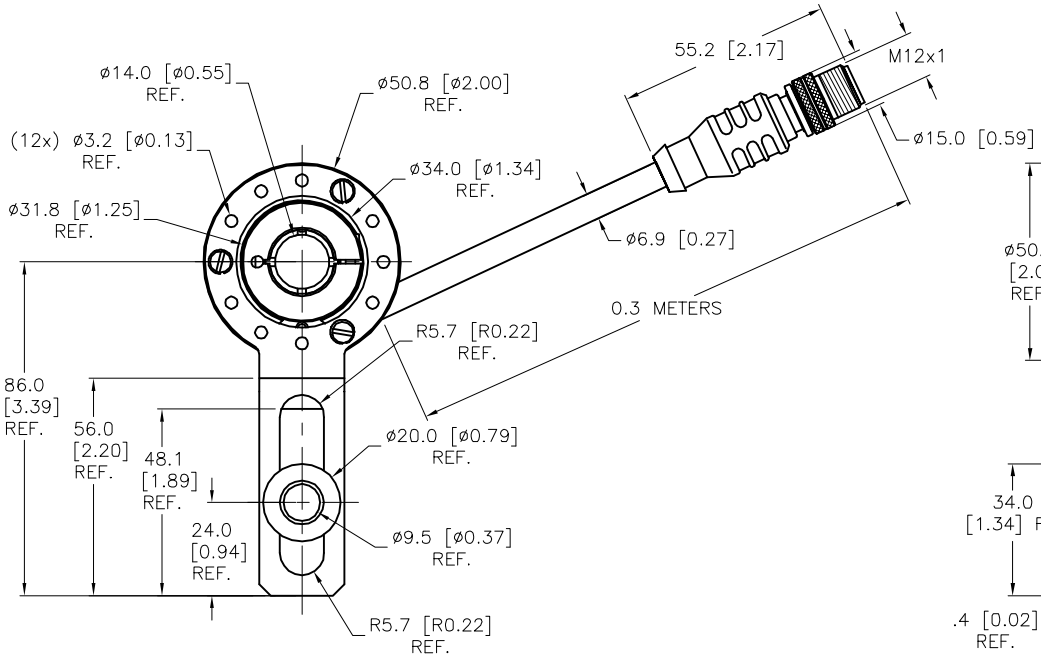

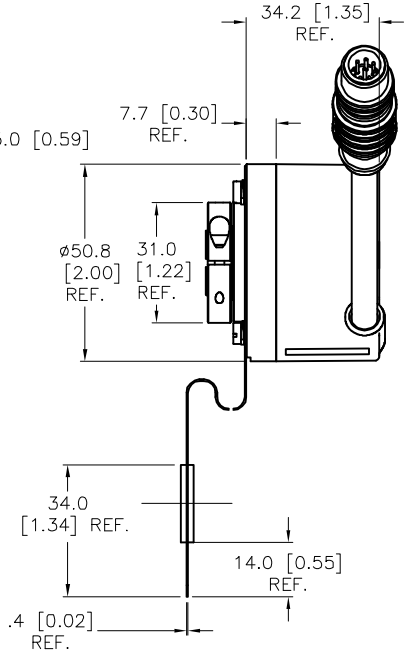

SOURCE DRAWING – FOR REFERENCE ONLY

CABLE LENGTH	TOLERANCE *
ALL LENGTHS	+ 4% (OR 50mm) OF LENGTH − 0% (OR 0mm) OF LENGTH WHICHEVER IS GREATER
STRIP LENGTH	**TOLERANCE ***
0–7mm	±0.5mm
8–29mm	±1.0mm
30–49mm	±2.0mm
50–69mm	±3.0mm
70–100mm	±4.0mm
OVER 100mm	±5.0mm
* UNLESS OTHERWISE SPECIFIED	

REV	DESCRIPTION	BY	DATE	ECO NO.
C	UPDATE CABLE JACKET COLOR IN SPECS	TR	01/30/23	78254

RELATED DOCUMENTS
1.
2.
3.
4.

3RD ANGLE PROJECTION

THIS DRAWING IS CONFIDENTIAL AND THE PROPERTY OF TURCK INC. USE OF THIS DOCUMENT WITHOUT WRITTEN PERMISSION IS PROHIBITED.

TURCK
3000 CAMPUS DRIVE
MINNEAPOLIS, MN 55441
1–800–544–7769
(763) 553–7300
(763) 553–0708 fax
www.turck.us

MATERIAL: SEE SPECIFICATIONS

FINISH: SEE SPECIFICATIONS

ALL DIMENSIONS DISPLAYED ON THIS DRAWING ARE FOR REFERENCE ONLY

CONTACT TURCK FOR MORE INFORMATION

DRFT: TV | DATE: 04/08/16
APVD: K.H. | SCALE: 1=2.0

UNIT OF MEASUREMENT
MILLIMETER [INCH]
DO NOT SCALE THIS DRAWING

DESCRIPTION: RI–12I14S1–2B1024–CT0.3M–E–RSS 8T

IDENTIFICATION NO.: 15455970 | REV: C

FILE: 15455970 | SHEET 1 OF 1

Approved 01/30/2023, work order #265735 by K.H.