WIRING DIAGRAM

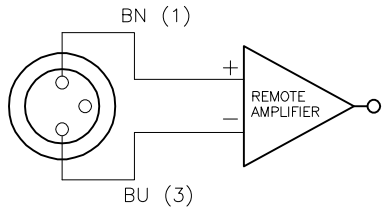

OUTPUT: Y1

SPECIFICATIONS

RATED OPERATING DISTANCE	2 mm [.079"]
MOUNTING MODE	FLUSH
REPEATABILITY	≤2%
TEMPERATURE DRIFT	≤ ±10%
HYSTERESIS	1–10%
OPERATING TEMPERATURE	–25°C to +70°C (–13°F to +158°F)
RATED OPERATIONAL VOLTAGE	NOMINAL 8.2 VDC
NON–ACTUATED CURRENT CONSUMPTION	≥2.1 mA
ACTUATED CURRENT CONSUMPTION	≤ 1.2 mA
APPROVAL ACCORDING TO	KEMA 02 ATEX 1090X
INTERNAL CAPACITANCE (CI)/INDUCTANCE (LI)	150 nF/150 µH
REVERSE POLARITY PROTECTION	INCORPORATED
OUTPUT FUNCTION	2–WIRE NAMUR
SWITCHING FREQUENCY	≤2.0 kHz
HOUSING MATERIAL/COLOR	PLASTIC, PP–GF20
ACTIVE FACE	PLASTIC, PP–GF20
CABLE	ø3.0, BLUE, PVC
VIBRATION RESISTANCE	55 Hz (1mm)
SHOCK RESISTANCE	30 g, (11 ms)
PROTECTION CLASS	IP 67
SWITCHING STATE	LED, YELLOW

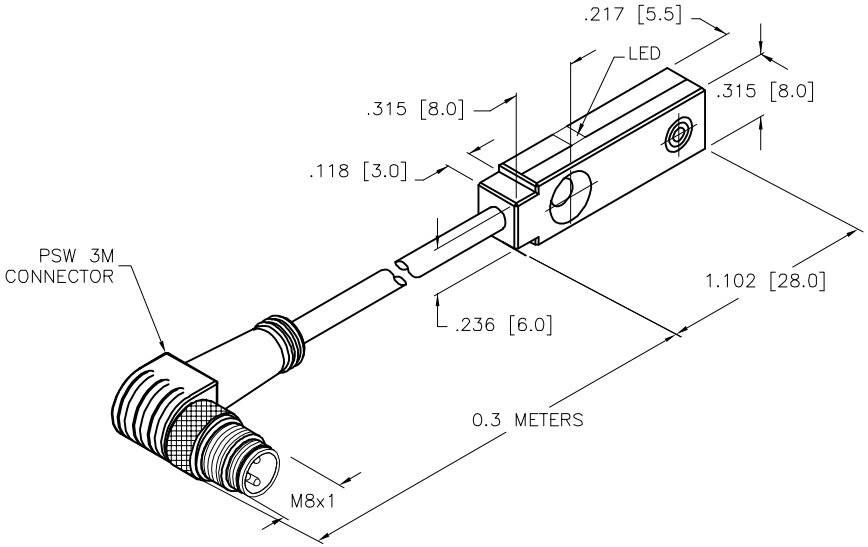

SOURCE DRAWING - FOR REFERENCE ONLY

NOTES:

1. "/S1105" DESIGNATES EXTENSION CORDSETS AND SENSOR MOLD–ONS WITH A TIGHTER TOLERANCE –0/+12.5MM (MAXIMUM LENGTH IS 1.7 METERS.)

REV	DESCRIPTION	BY	DATE	ECO NO.
B	UPDATED NOTES AND DESCRIPTION	AS	06/23/26	81908

RELATED DOCUMENTS
1.
2.
3.
4.

3RD ANGLE PROJECTION

THIS DRAWING IS CONFIDENTIAL AND THE PROPERTY OF TURCK INC. USE OF THIS DOCUMENT WITHOUT WRITTEN PERMISSION IS PROHIBITED.

TURCK
3000 CAMPUS DRIVE
MINNEAPOLIS, MN 55441
1–800–544–7769
(763) 553–7300
(763) 553–0708 fax
www.turck.us

MATERIAL: SEE SPECIFICATIONS

FINISH: SEE SPECIFICATIONS

ALL DIMENSIONS DISPLAYED ON THIS DRAWING ARE FOR REFERENCE ONLY

CONTACT TURCK FOR MORE INFORMATION

DRFT: NF | DATE: 10/14/25
APVD: A.F. | SCALE: 1=1.0

UNIT OF MEASUREMENT
INCH [MILLIMETER]

DO NOT SCALE THIS DRAWING

DESCRIPTION: BI2–Q5.5–Y1X–0.3–PSW3M/S1105

IDENTIFICATION NO.: 200017229 | REV: B

FILE: 200017229 | SHEET 1 OF 1